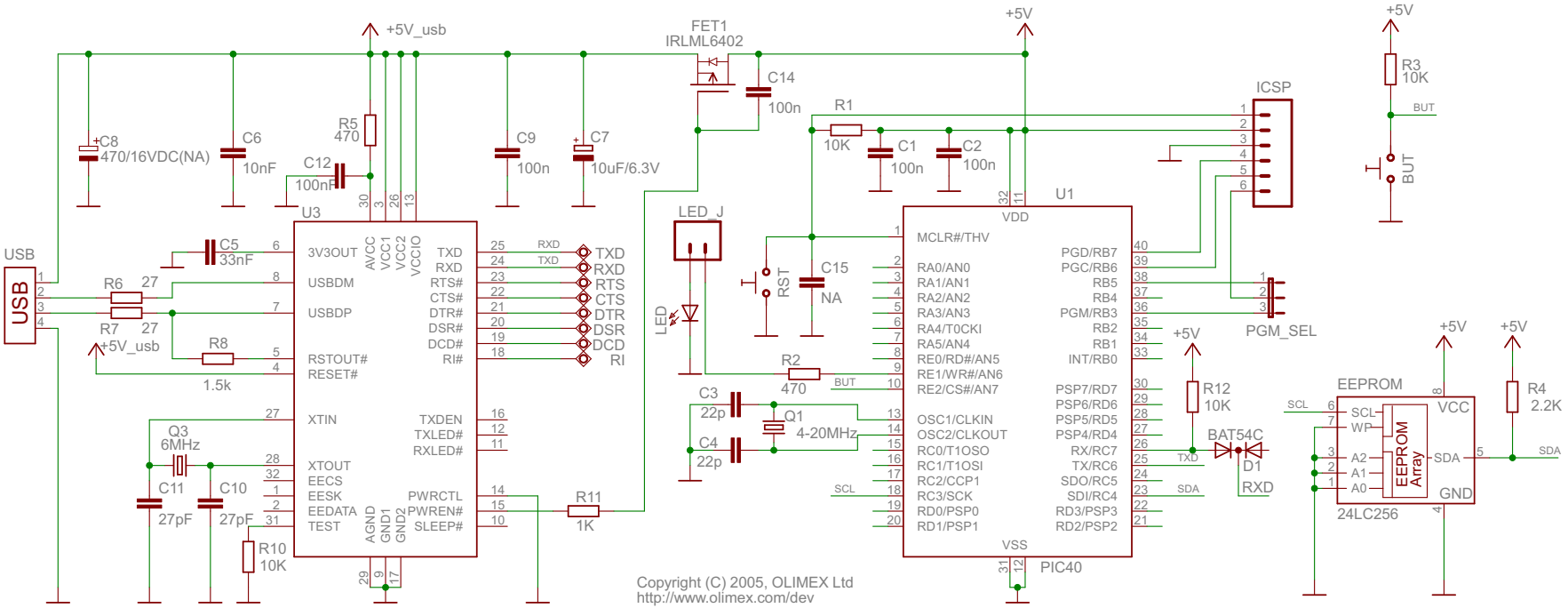
+5V_usb
FET1
IRLML6402
+5V
C14
100n
R1
10K
C1
100n
C2
100n
ICSP
R3
10K
BUT
C8
470/16VDC(NA)
C6
10nF
R5
470
C12
100nF
C9
100n
C7
10uF/6.3V
U3
U1
USB
C5
33nF
R6
27
R7
27
R8
1.5k
3V3OUT
USBDM
USBDP
RSTOUT#
RESET#
XTIN
XTOUT
EECS
EESK
EEDATA
TEST
AVCC
VCC1
VCC2
VCCIO
AGND
GND1
GND2
TXD
RXD
RTS#
CTS#
DTR#
DSR#
DCD#
RI#
TXDEN
TXLED#
RXLED#
PWRCTL
PWREN#
SLEEP#
Q3
6MHz
C11
27pF
C10
27pF
R10
10K
R11
1K
LED_J
LED
RST
C15
NA
R2
470
C3
22p
C4
22p
Q1
4-20MHz
MCLR#/THV
RA0/AN0
RA1/AN1
RA2/AN2
RA3/AN3
RA4/T0CKI
RA5/AN4
RE0/RD#/AN5
RE1/WR#/AN6
RE2/CS#/AN7
OSC1/CLKIN
OSC2/CLKOUT
RC0/T1OSO
RC1/T1OSI
RC2/CCP1
RC3/SCK
RD0/PSP0
RD1/PSP1
VDD
VSS
PGD/RB7
PGC/RB6
RB5
RB4
PGM/RB3
RB2
RB1
INT/RB0
PSP7/RD7
PSP6/RD6
PSP5/RD5
PSP4/RD4
RX/RC7
TX/RC6
SDO/RC5
SDI/RC4
RD3/PSP3
RD2/PSP2
PIC40
PGM_SEL
R12
10K
BAT54C
D1
RXD
EEPROM
SCL
WP
A2
A1
A0
VCC
SDA
GND
EEPROM Array
24LC256
R4
2.2K
Copyright (C) 2005, OLIMEX Ltd
http://www.olimex.com/dev