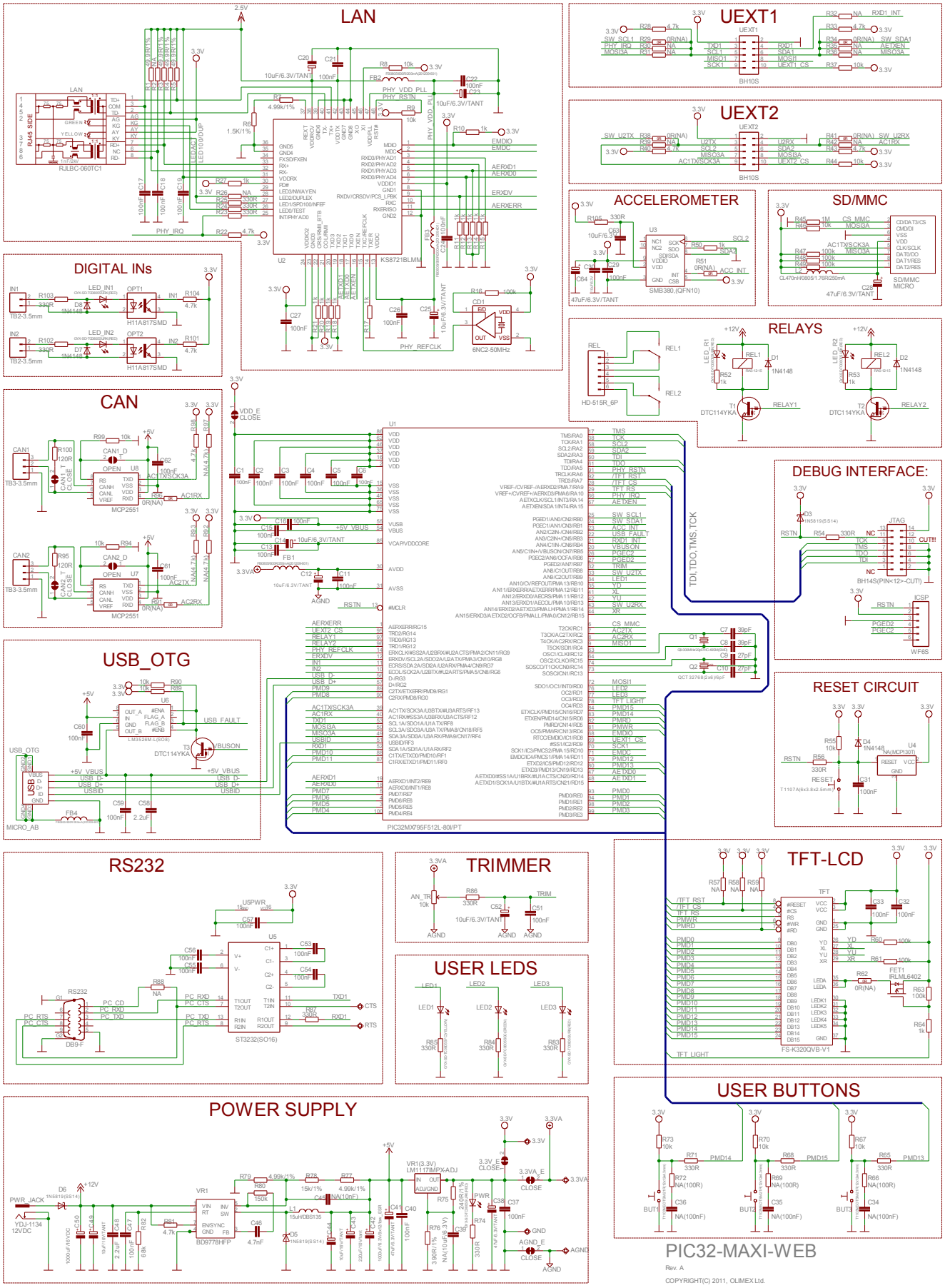
LAN
UEXT1
UEXT2
ACCELEROMETER
SD/MMC
DIGITAL INs
RELAYS
CAN
DEBUG INTERFACE:
USB_OTG
RESET CIRCUIT
RS232
TRIMMER
USER LEDS
TFT-LCD
USER BUTTONS
POWER SUPPLY
PIC32-MAXI-WEB
Rev. A
COPYRIGHT(C) 2011, OLIMEX Ltd.
http://www.olimex.com/dev