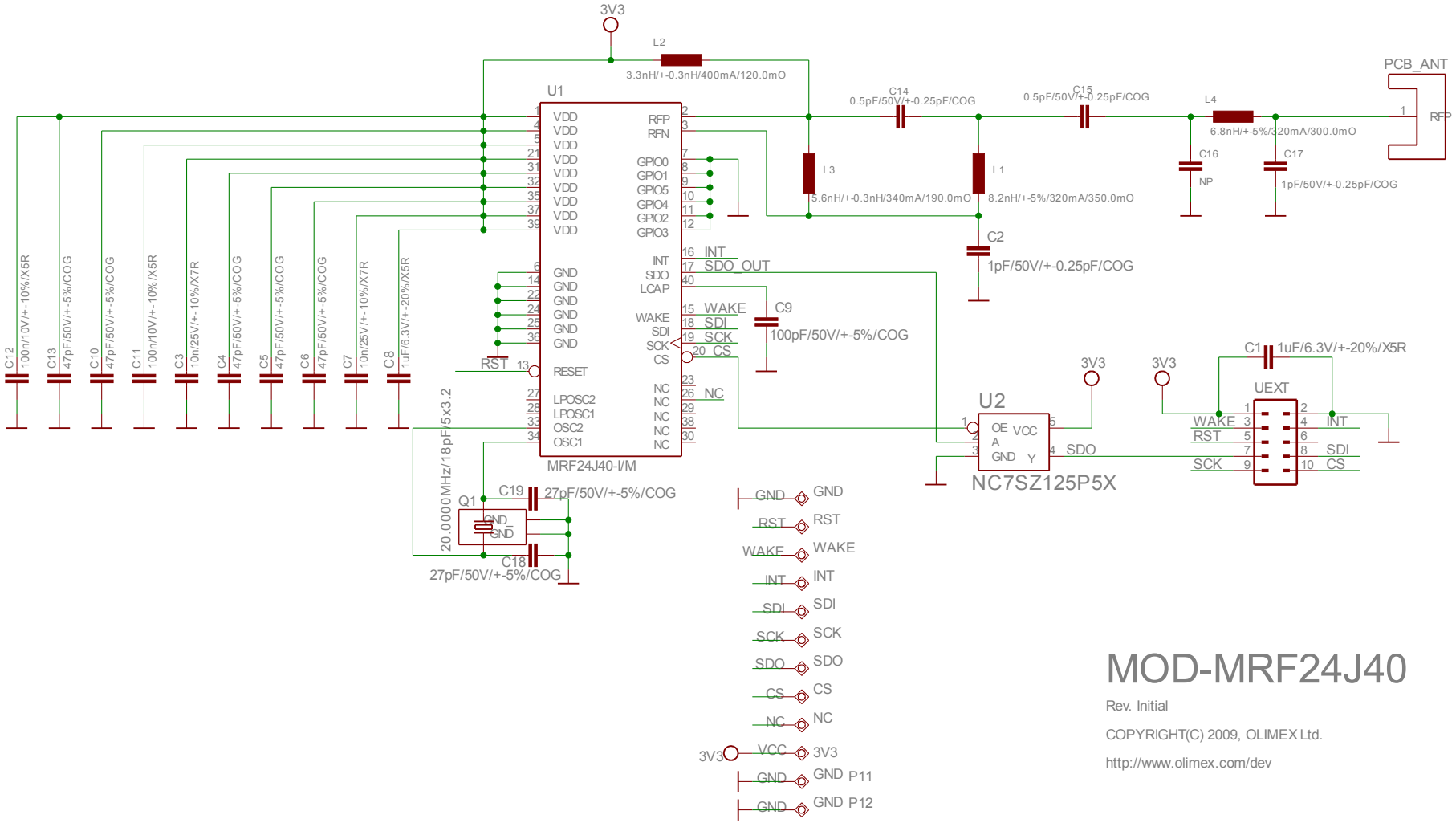

MOD-MRF24J40

Rev. Initial

COPYRIGHT(C) 2009, OLIMEX Ltd.

http://www.olimex.com/dev