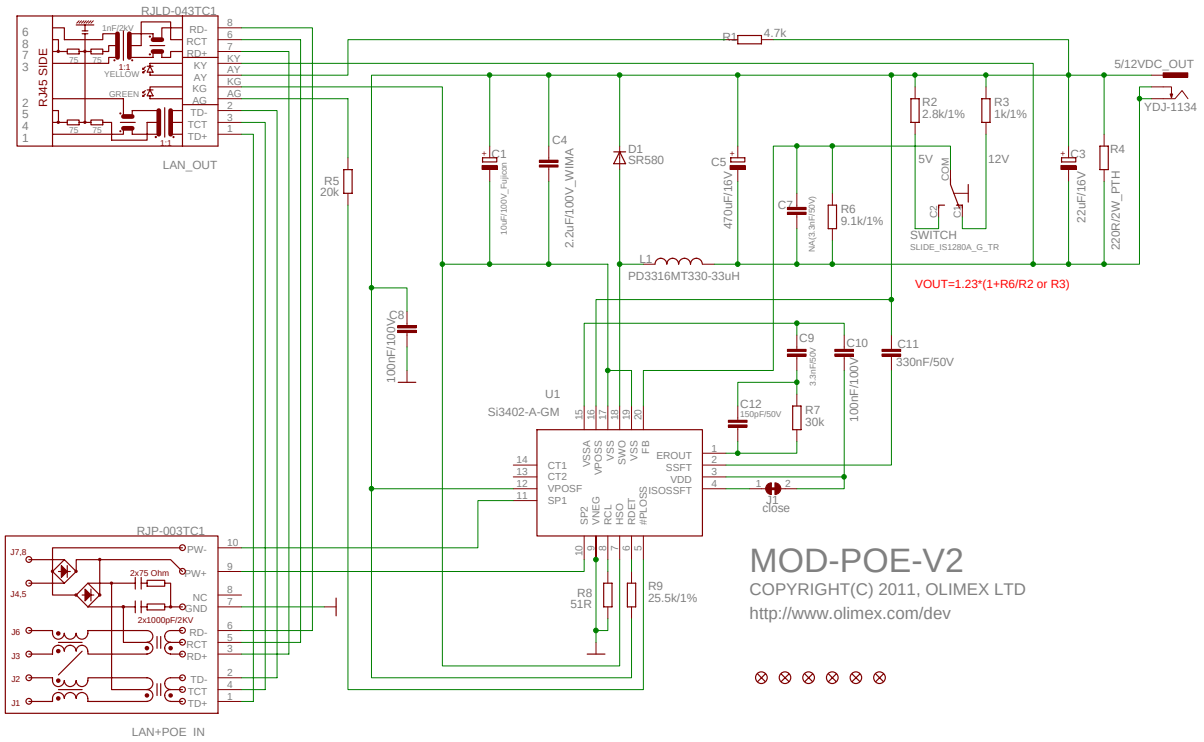
RJLD-043TC1
RJ45 SIDE
LAN_OUT
RJP-003TC1
LAN+POE IN
R1 4.7k
5/12VDC_OUT
YDJ-1134
R2 2.8k/1%
R3 1k/1%
R4 220R/2W_PTH
C1 10uF/100V_Fujicon
C4 2.2uF/100V_WIMA
D1 SR580
C5 470uF/16V
C2 NA(3.3nF/50V)
R6 9.1k/1%
C3 22uF/16V
SWITCH SLIDE_IS1280A_G_TR
L1 PD3316MT330-33uH
VOUT=1.23*(1+R6/R2 or R3)
R5 20k
C8 100nF/100V
C9 3.3nF/50V
C10 100nF/100V
C11 330nF/50V
C12 150pF/50V
R7 30k
U1 Si3402-A-GM
J1 close
R8 51R
R9 25.5k/1%
MOD-POE-V2
COPYRIGHT(C) 2011, OLIMEX LTD
http://www.olimex.com/dev