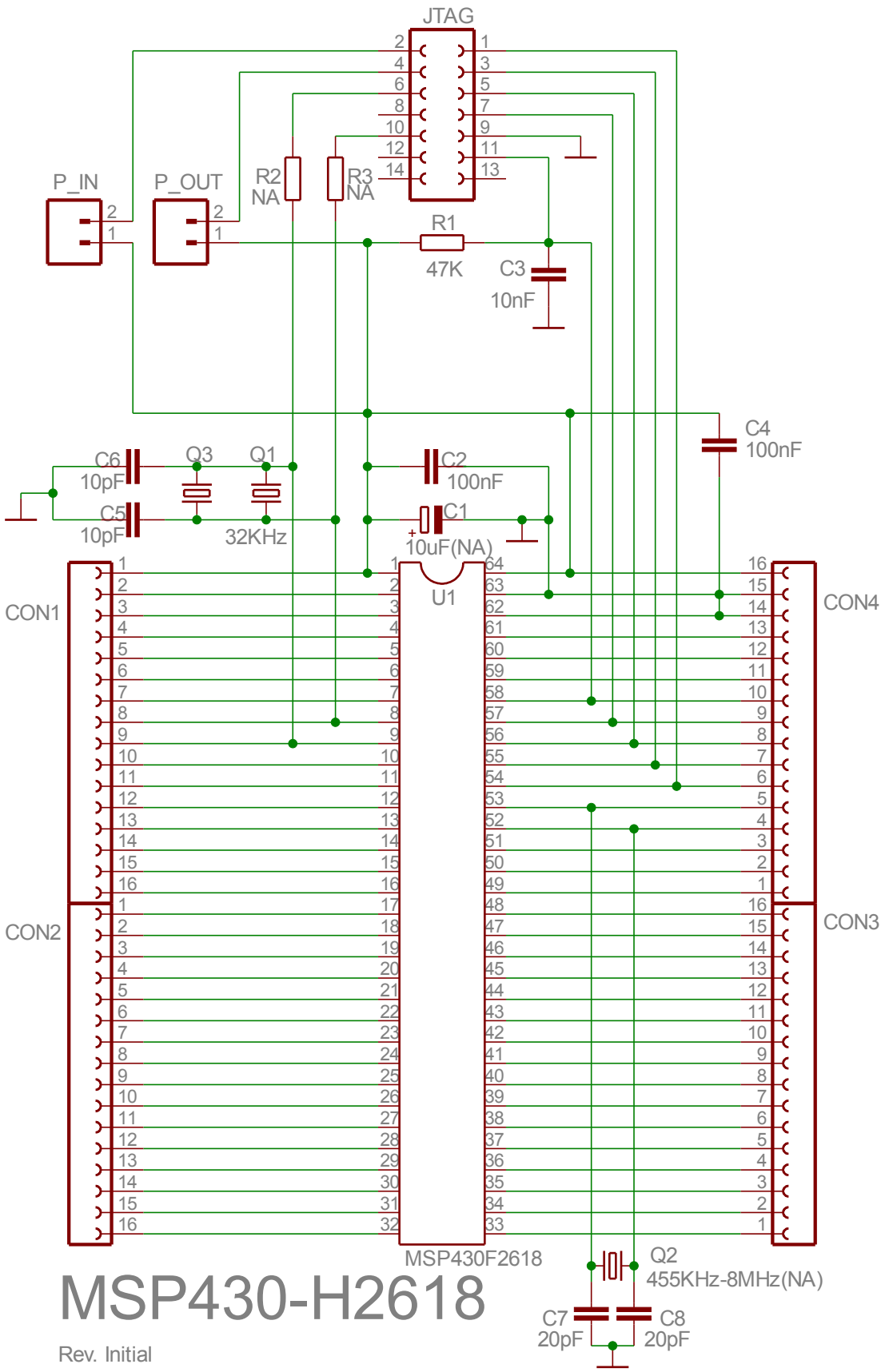

MSP430-H2618

Rev. Initial

COPYRIGHT(C) 2009

WWW.OLIMEX.COM/DEV