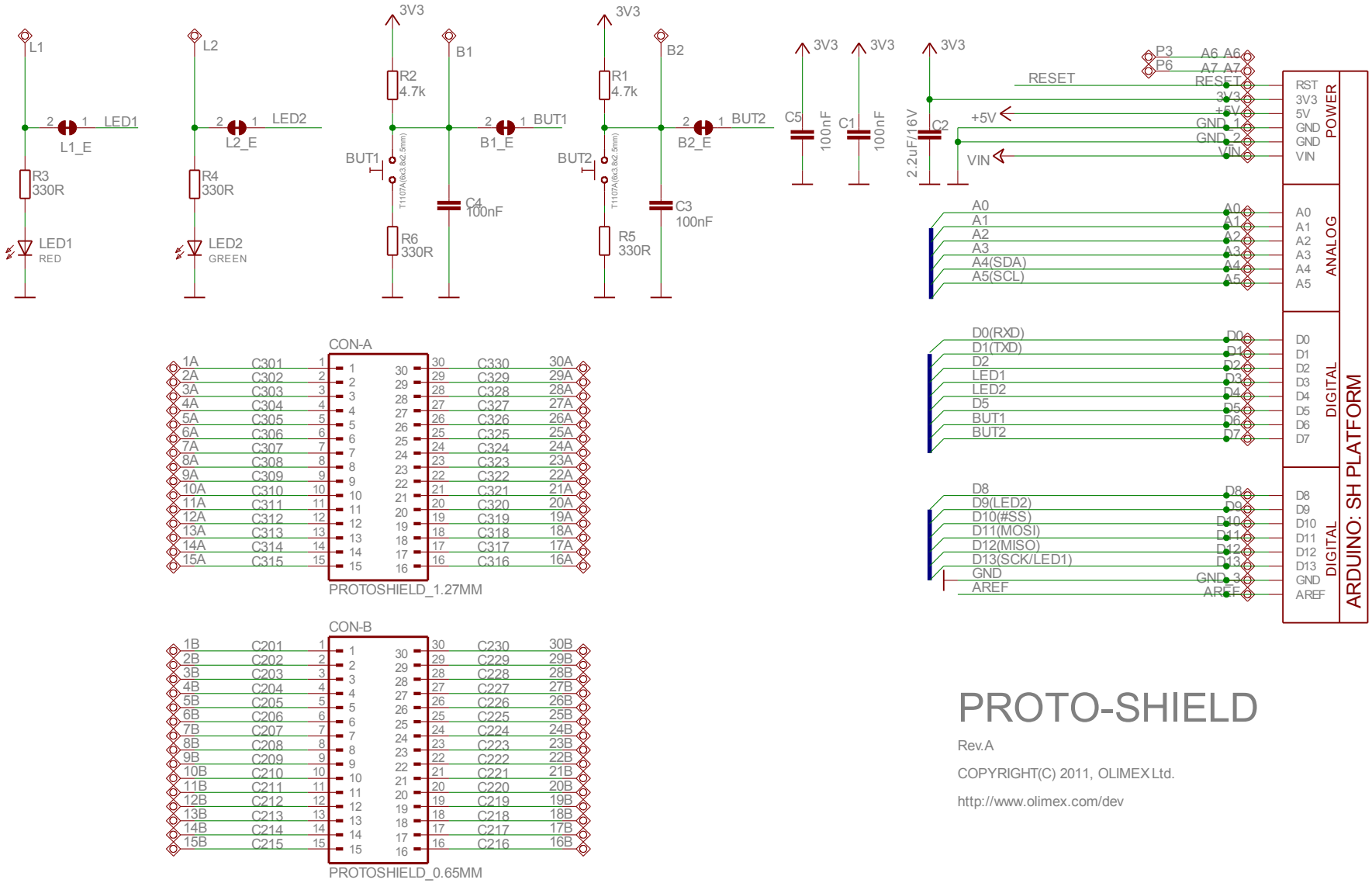

PROTO-SHIELD

Rev.A

COPYRIGHT(C) 2011, OLIMEX Ltd.

http://www.olimex.com/dev