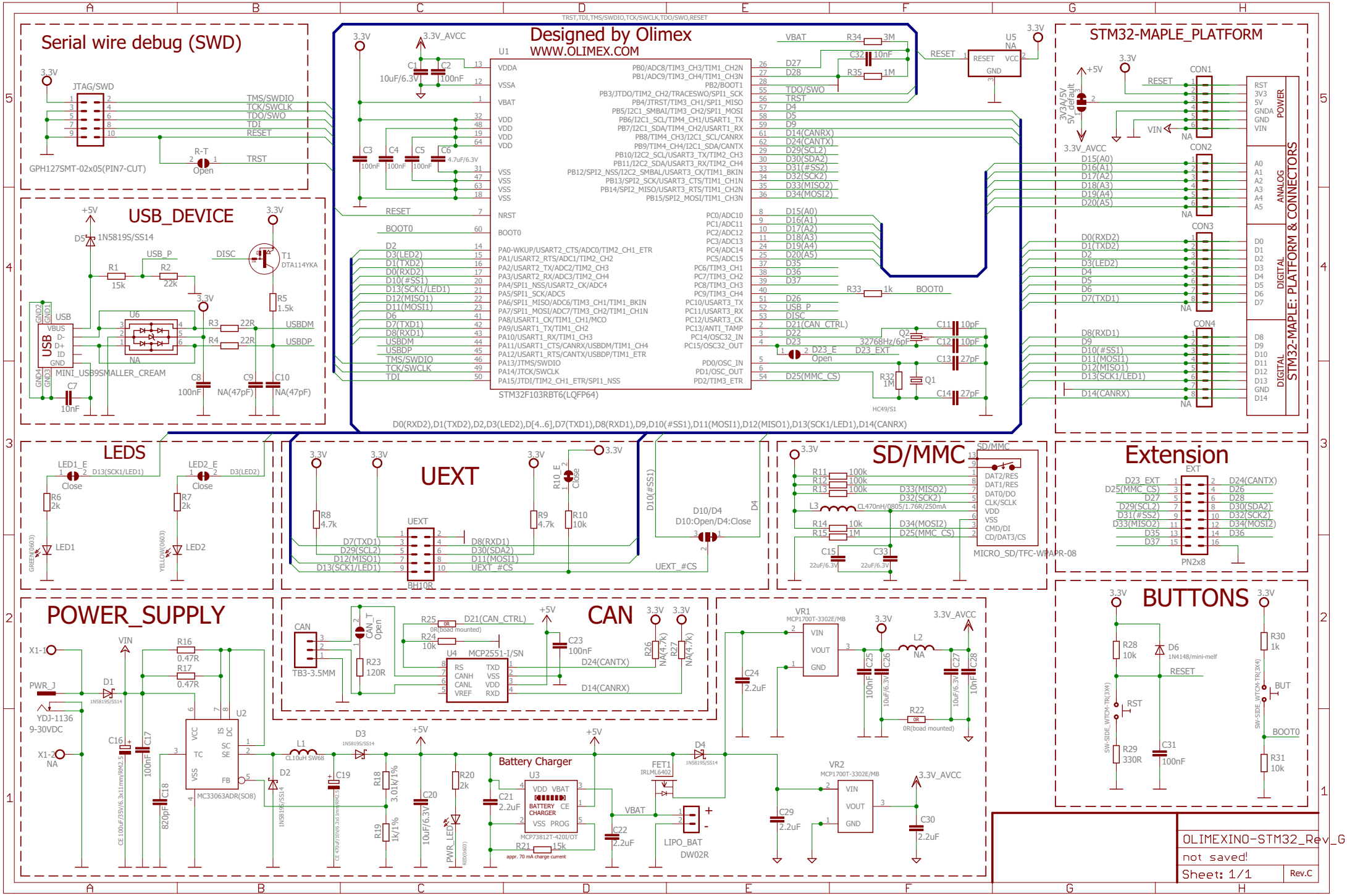
Serial wire debug (SWD)
JTAG/SWD
GPH127SMT-02x05(PIN7-CUT)
TMS/SWDIO
TCK/SWCLK
TDO/SWO
TDI
RESET
TRST
R-T
Open
USB_DEVICE
D5 1N5819S/SS14
USB_P
DISC
T1 DTA114YKA
R1 15k
R2 22k
R5 1.5k
U6
USB
MINI_USB9SMALLER_CREAM
R3 22R
R4 22R
USBDM
USBDP
C7 10nF
C8 100nF
C9 NA(47pF)
C10 NA(47pF)
Designed by Olimex
WWW.OLIMEX.COM
U1
STM32F103RBT6(LQFP64)
VDDA
VSSA
VBAT
VDD
VSS
NRST
BOOT0
PA0-WKUP/USART2_CTS/ADC0/TIM2_CH1_ETR
PA1/USART2_RTS/ADC1/TIM2_CH2
PA2/USART2_TX/ADC2/TIM2_CH3
PA3/USART2_RX/ADC3/TIM2_CH4
PA4/SPI1_NSS/USART2_CK/ADC4
PA5/SPI1_SCK/ADC5
PA6/SPI1_MISO/ADC6/TIM3_CH1/TIM1_BKIN
PA7/SPI1_MOSI/ADC7/TIM3_CH2/TIM1_CH1N
PA8/USART1_CK/TIM1_CH1/MCO
PA9/USART1_TX/TIM1_CH2
PA10/USART1_RX/TIM1_CH3
PA11/USART1_CTS/CANRX/USBDM/TIM1_CH4
PA12/USART1_RTS/CANTX/USBDP/TIM1_ETR
PA13/JTMS/SWDIO
PA14/JTCK/SWCLK
PA15/JTDI/TIM2_CH1_ETR/SPI1_NSS
PB0/ADC8/TIM3_CH3/TIM1_CH2N
PB1/ADC9/TIM3_CH4/TIM1_CH3N
PB2/BOOT1
PB3/JTDO/TIM2_CH2/TRACESWO/SPI1_SCK
PB4/JTRST/TIM3_CH1/SPI1_MISO
PB5/I2C1_SMBAI/TIM3_CH2/SPI1_MOSI
PB6/I2C1_SCL/TIM4_CH1/USART1_TX
PB7/I2C1_SDA/TIM4_CH2/USART1_RX
PB8/TIM4_CH3/I2C1_SCL/CANRX
PB9/TIM4_CH4/I2C1_SDA/CANTX
PB10/I2C2_SCL/USART3_TX/TIM2_CH3
PB11/I2C2_SDA/USART3_RX/TIM2_CH4
PB12/SPI2_NSS/I2C2_SMBAL/USART3_CK/TIM1_BKIN
PB13/SPI2_SCK/USART3_CTS/TIM1_CH1N
PB14/SPI2_MISO/USART3_RTS/TIM1_CH2N
PB15/SPI2_MOSI/TIM1_CH3N
PC0/ADC10
PC1/ADC11
PC2/ADC12
PC3/ADC13
PC4/ADC14
PC5/ADC15
PC6/TIM3_CH1
PC7/TIM3_CH2
PC8/TIM3_CH3
PC9/TIM3_CH4
PC10/USART3_TX
PC11/USART3_RX
PC12/USART3_CK
PC13/ANTI_TAMP
PC14/OSC32_IN
PC15/OSC32_OUT
PD0/OSC_IN
PD1/OSC_OUT
PD2/TIM3_ETR
D0(RXD2),D1(TXD2),D2,D3(LED2),D[4..6],D7(TXD1),D8(RXD1),D9,D10(#SS1),D11(MOSI1),D12(MISO1),D13(SCK1/LED1),D14(CANRX)
U5 NA
RESET VCC GND
R34 3M
C32 10nF
R35 1M
R33 1k
BOOT0
Q2 32768Hz/6pF
D23_E Open
D23_EXT
C11 10pF
C12 10pF
C13 27pF
C14 27pF
R32 1M
Q1 HC49/S1
STM32-MAPLE_PLATFORM
CON1
CON2
CON3
CON4
POWER
ANALOG
DIGITAL
STM32-MAPLE: PLATFORM & CONNECTORS
LEDS
LED1_E Close
LED2_E Close
D13(SCK1/LED1)
D3(LED2)
R6 2k
R7 2k
LED1
LED2
UEXT
R8 4.7k
R9 4.7k
R10 10k
R10_E Close
BH10R
D7(TXD1)
D29(SCL2)
D12(MISO1)
D13(SCK1/LED1)
D8(RXD1)
D30(SDA2)
D11(MOSI1)
UEXT_#CS
D10/D4
D10:Open/D4:Close
SD/MMC
R11 100k
R12 100k
R13 100k
L3 CL470nH/0805/1.76R/250mA
R14 10k
R15 1M
C15 22uF/6.3V
C33 22uF/6.3V
DAT2/RES
DAT1/RES
DAT0/DO
CLK/SCLK
VDD
VSS
CMD/DI
CD/DAT3/CS
MICRO_SD/TFC-WHAPR-08
Extension
EXT
PN2x8
D23_EXT
D25(MMC_CS)
D27
D29(SCL2)
D31(#SS2)
D33(MISO2)
D35
D37
D24(CANTX)
D26
D28
D30(SDA2)
D32(SCK2)
D34(MOSI2)
D36
POWER_SUPPLY
X1-1
PWR_J
YDJ-1136
9-30VDC
X1-2 NA
D1 1N5819S/SS14
R16 0.47R
R17 0.47R
C16
C17 100nF
C18 820pF
U2
MC33063ADR(SO8)
L1 CL10uH SW68
D3 1N5819S/SS14
D2 1N5819S/SS14
C19
R18 3.01k/1%
R19 1k/1%
C20 10uF/6.3V
R20 2k
PWR_LED
CAN
TB3-3.5MM
CAN_T Open
R23 120R
R25 0R(boad mounted)
R24 10k
D21(CAN_CTRL)
U4 MCP2551-I/SN
RS
CANH
CANL
VREF
TXD
VSS
VDD
RXD
C23 100nF
D24(CANTX)
D14(CANRX)
R26 NA(4.7k)
R27 NA(4.7k)
Battery Charger
U3
BATTERY CHARGER
MCP73812T-420I/OT
R21 15k
appr. 70 mA charge current
C21 2.2uF
C22 2.2uF
FET1 IRLML6402
D4 1N5819S/SS14
LIPO_BAT
DW02R
VR1 MCP1700T-3302E/MB
VR2 MCP1700T-3302E/MB
VIN
VOUT
GND
C24 2.2uF
C25 100nF
C26 10uF/6.3V
L2 NA
C27 10uF/6.3V
C28 10nF
R22 0R(boad mounted)
C29 2.2uF
C30 2.2uF
3.3V_AVCC
BUTTONS
R28 10k
D6 1N4148/mini-melf
RESET
RST
R29 330R
C31 100nF
R30 1k
BUT
BOOT0
R31 10k
OLIMEXINO-STM32_Rev_G
not saved!
Sheet: 1/1
Rev.C