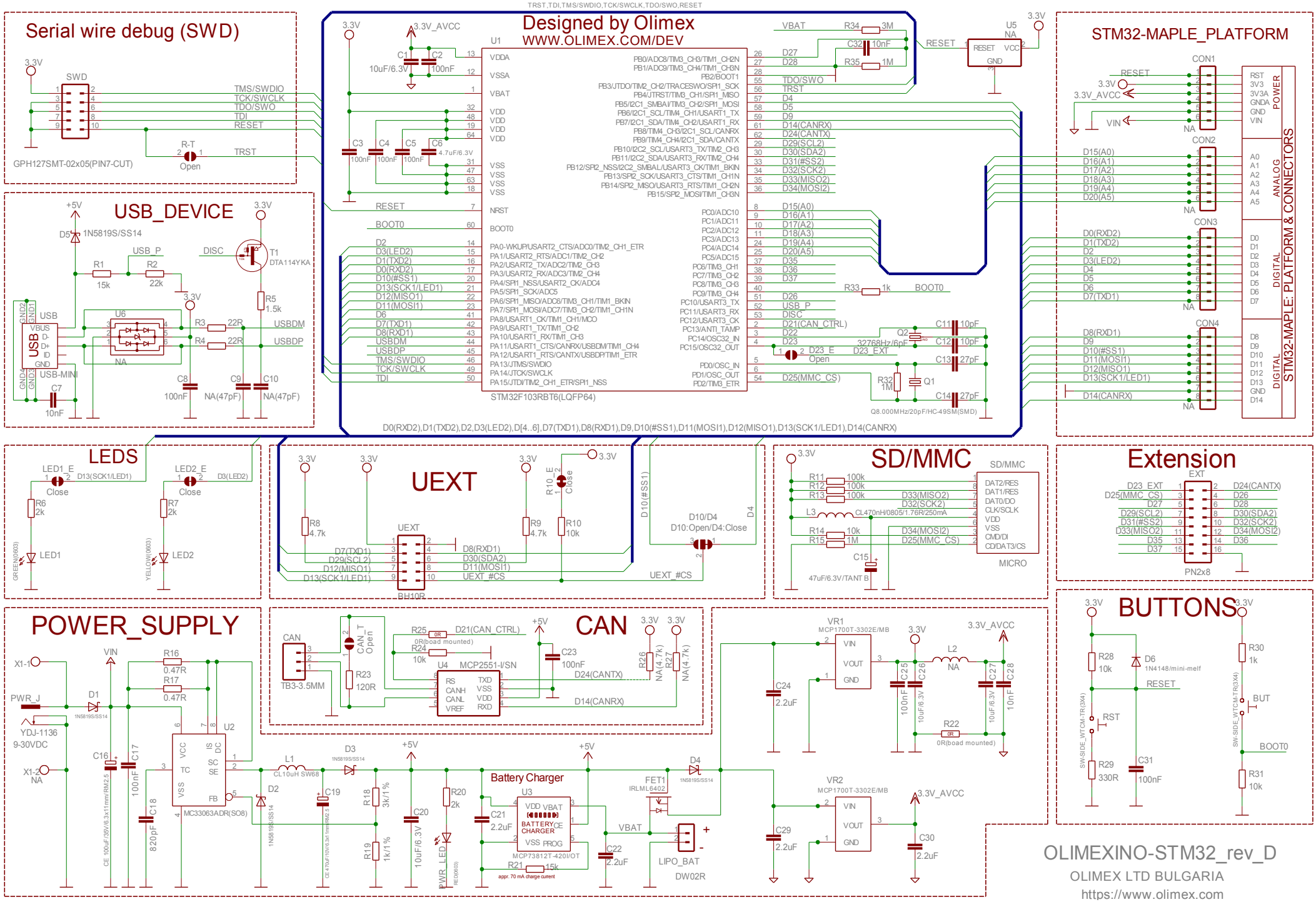
Serial wire debug (SWD)
Designed by Olimex
WWW.OLIMEX.COM/DEV
STM32-MAPLE_PLATFORM
USB_DEVICE
LEDS
UEXT
SD/MMC
Extension
POWER_SUPPLY
CAN
BUTTONS
Battery Charger
STM32F103RBT6(LQFP64)
OLIMEXINO-STM32_rev_D
OLIMEX LTD BULGARIA
https://www.olimex.com