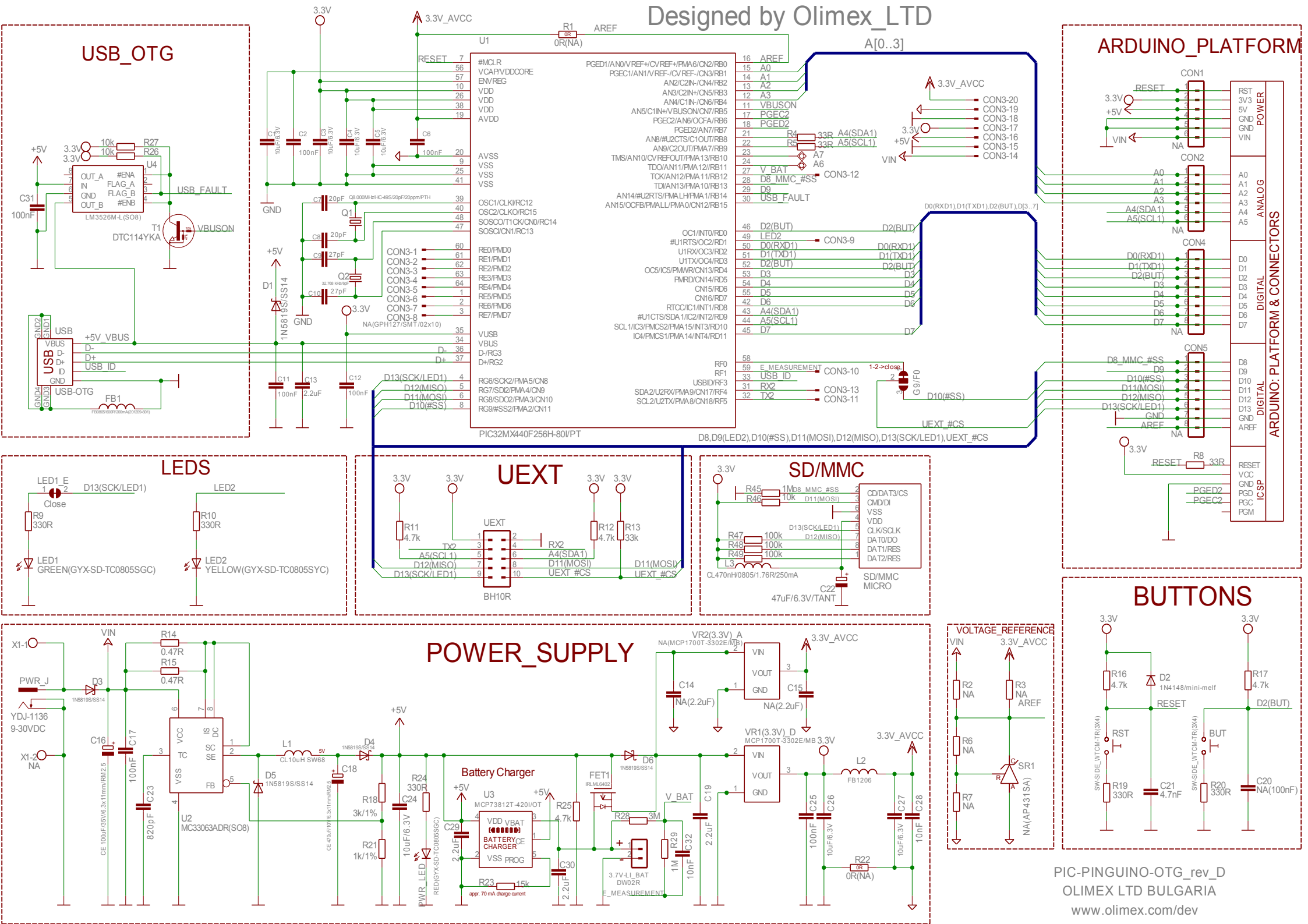
Designed by Olimex_LTD
USB_OTG
LM3526M-L(SO8)
DTC114YKA
USB-OTG
PIC32MX440F256H-80I/PT
ARDUINO_PLATFORM
ARDUINO: PLATFORM & CONNECTORS
LEDS
LED1 GREEN(GYX-SD-TC0805SGC)
LED2 YELLOW(GYX-SD-TC0805SYC)
UEXT
BH10R
SD/MMC
SD/MMC MICRO
BUTTONS
POWER_SUPPLY
Battery Charger
U2 MC33063ADR(SO8)
U3 MCP73812T-420I/OT
VOLTAGE_REFERENCE
PIC-PINGUINO-OTG_rev_D
OLIMEX LTD BULGARIA
www.olimex.com/dev