JOYSTICK-10K-CAP

Operating temperature: -10+75C
Potentiometer resistance XY: 10K
Drawing and PCB layout:

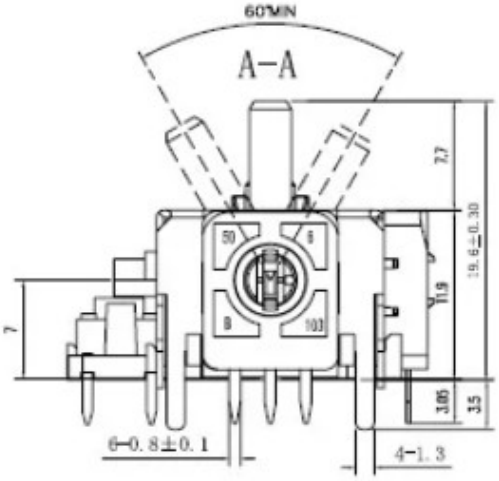

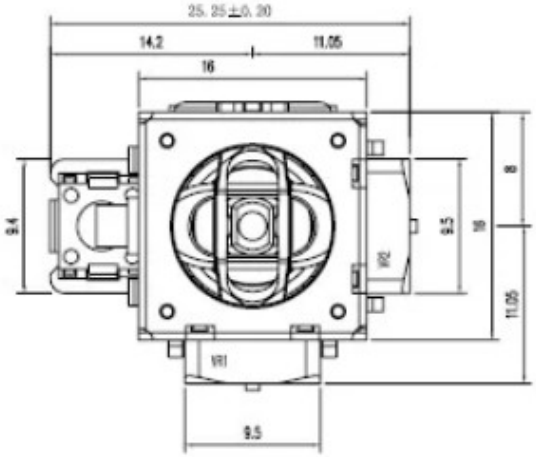

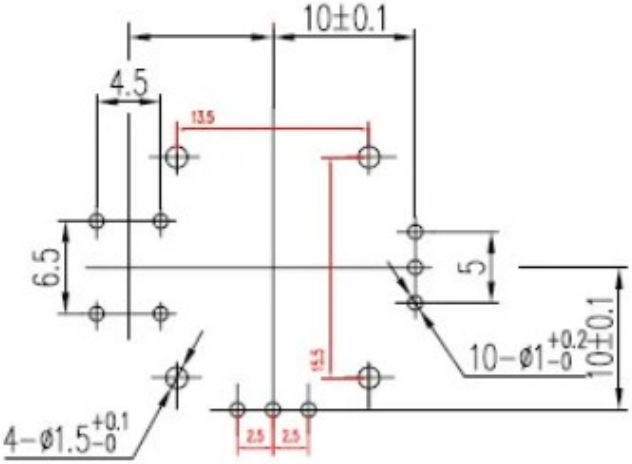

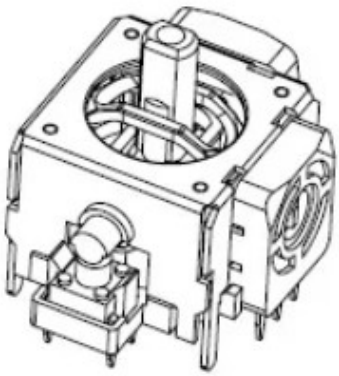
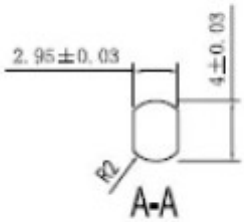
Shaft drawing