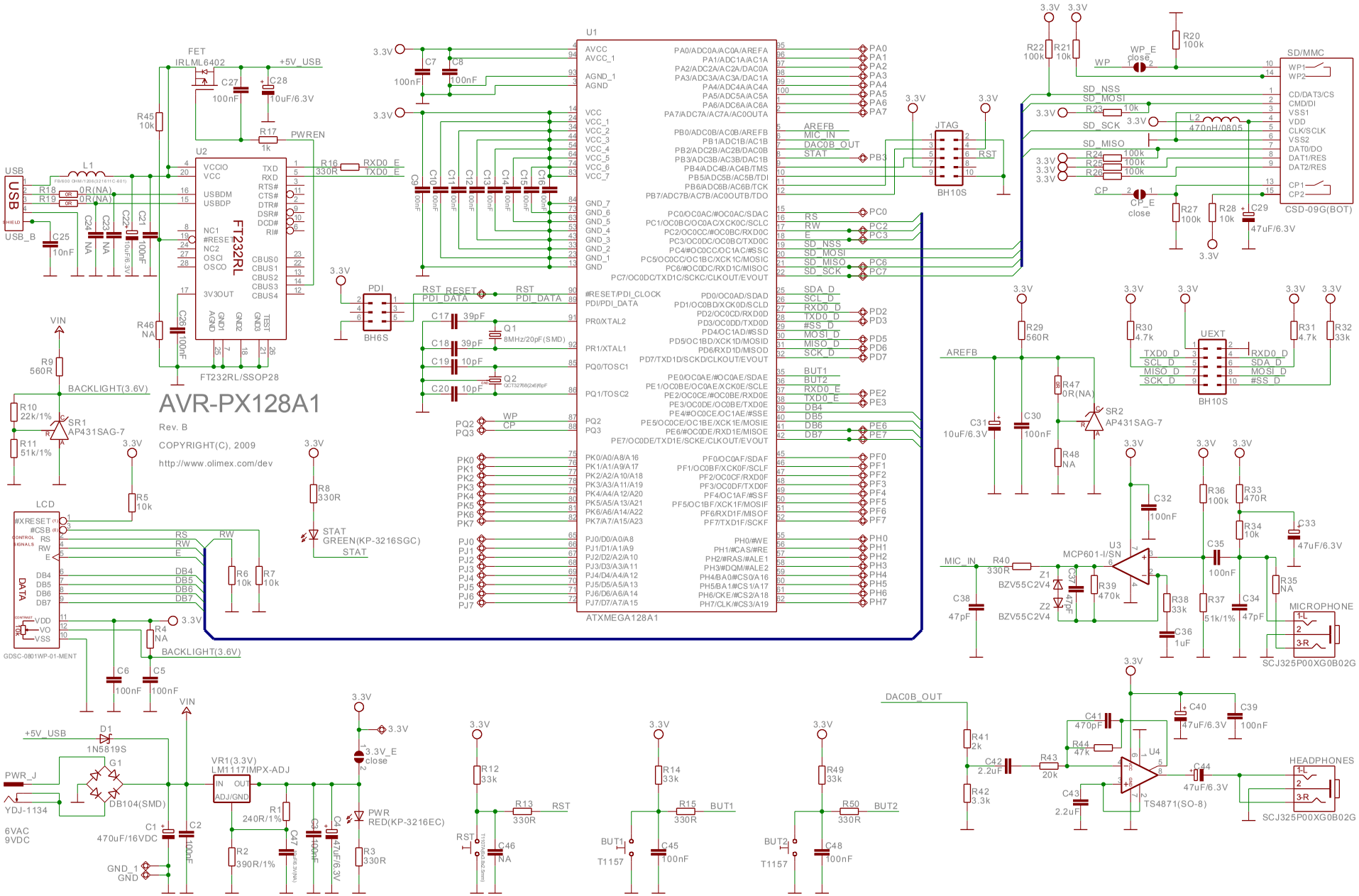
AVR-PX128A1
Rev. B
COPYRIGHT(C), 2009
http://www.olimex.com/dev
U1
ATXMEGA128A1
U2
FT232RL
FT232RL/SSOP28
USB
USB_B
FET
IRLML6402
+5V_USB
PWREN
RXD0_E
TXD0_E
RST_RESET
PDI_DATA
PDI
BH6S
Q1
8MHz/20pF(SMD)
Q2
JTAG
BH10S
SD/MMC
CSD-09G(BOT)
UEXT
BH10S
AREFB
SR2
AP431SAG-7
U3
MCP601-I/SN
MIC_IN
MICROPHONE
SCJ325P00XG0B02G
VIN
BACKLIGHT(3.6V)
SR1
AP431SAG-7
LCD
GDSC-0801WP-01-MENT
STAT
GREEN(KP-3216SGC)
VR1(3.3V)
LM1117IMPX-ADJ
PWR_J
YDJ-1134
6VAC
9VDC
DB104(SMD)
PWR
RED(KP-3216EC)
DAC0B_OUT
U4
TS4871(SO-8)
HEADPHONES
SCJ325P00XG0B02G
BUT1
BUT2
T1157
RST