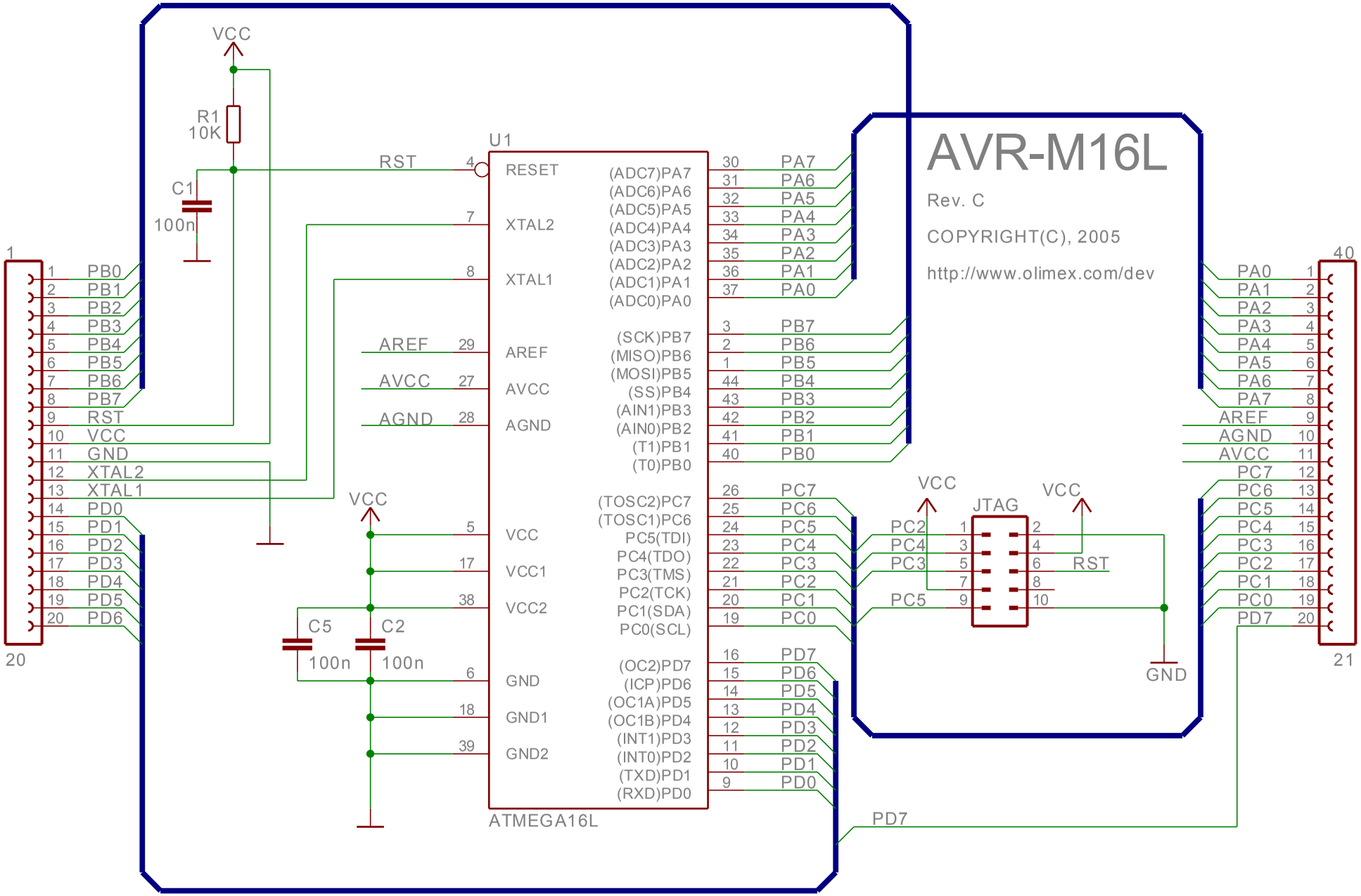
AVR-M16L
Rev. C
COPYRIGHT(C), 2005
http://www.olimex.com/dev
U1
ATMEGA16L
VCC
R1
10K
C1
100n
C5
100n
C2
100n
RST
AREF
AVCC
AGND
RESET
XTAL2
XTAL1
VCC
VCC1
VCC2
GND
GND1
GND2
(ADC7)PA7
(ADC6)PA6
(ADC5)PA5
(ADC4)PA4
(ADC3)PA3
(ADC2)PA2
(ADC1)PA1
(ADC0)PA0
(SCK)PB7
(MISO)PB6
(MOSI)PB5
(SS)PB4
(AIN1)PB3
(AIN0)PB2
(T1)PB1
(T0)PB0
(TOSC2)PC7
(TOSC1)PC6
PC5(TDI)
PC4(TDO)
PC3(TMS)
PC2(TCK)
PC1(SDA)
PC0(SCL)
(OC2)PD7
(ICP)PD6
(OC1A)PD5
(OC1B)PD4
(INT1)PD3
(INT0)PD2
(TXD)PD1
(RXD)PD0
JTAG
PC2
PC4
PC3
PC5
RST
GND
PD7
PB0
PB1
PB2
PB3
PB4
PB5
PB6
PB7
RST
VCC
GND
XTAL2
XTAL1
PD0
PD1
PD2
PD3
PD4
PD5
PD6
PA0
PA1
PA2
PA3
PA4
PA5
PA6
PA7
AREF
AGND
AVCC
PC7
PC6
PC5
PC4
PC3
PC2
PC1
PC0
PD7