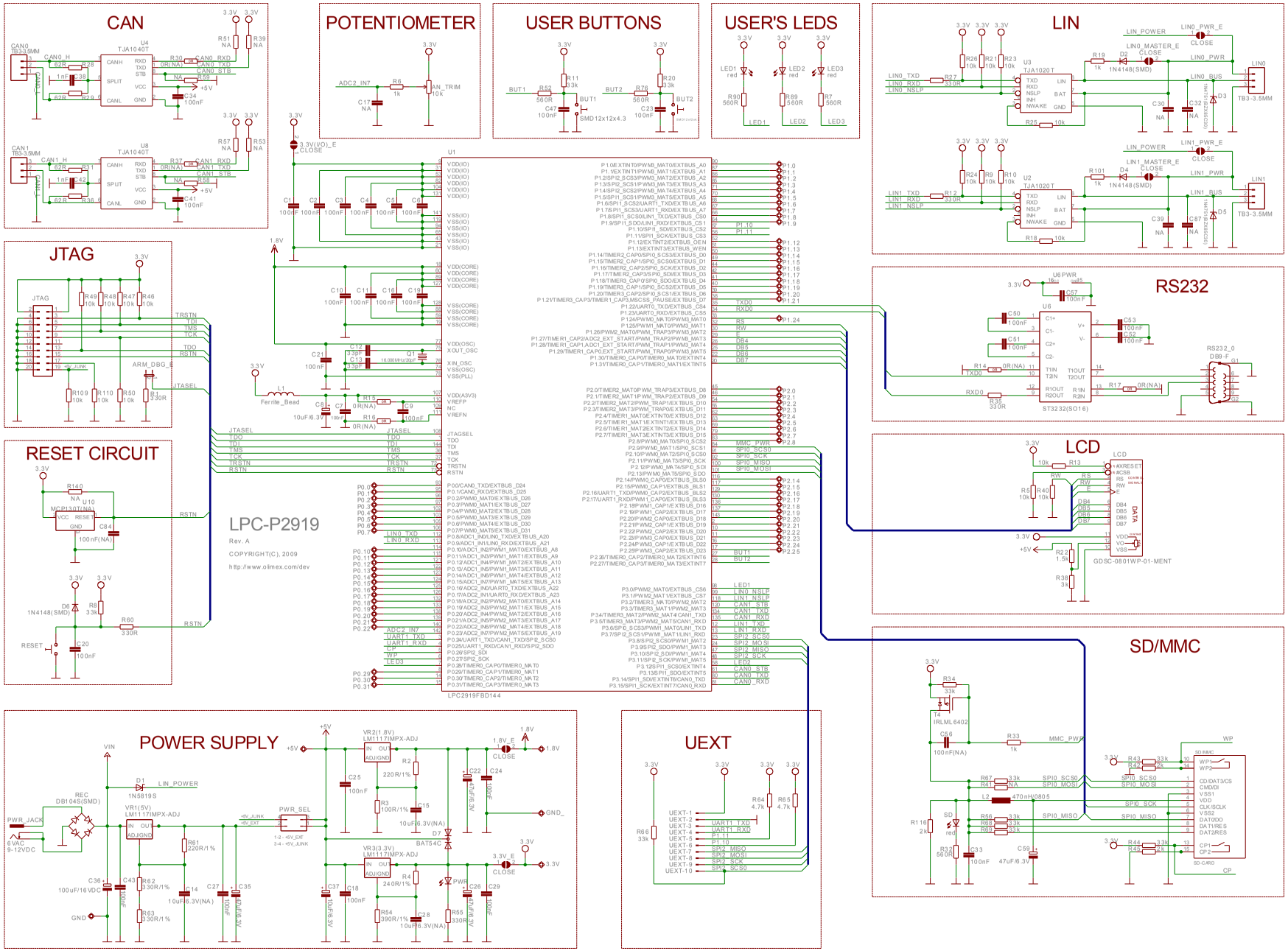
CAN
POTENTIOMETER
USER BUTTONS
USER'S LEDS
LIN
JTAG
RS232
RESET CIRCUIT
LCD
LPC-P2919
Rev. A
COPYRIGHT(C), 2009
http://www.olimex.com/dev
SD/MMC
POWER SUPPLY
UEXT