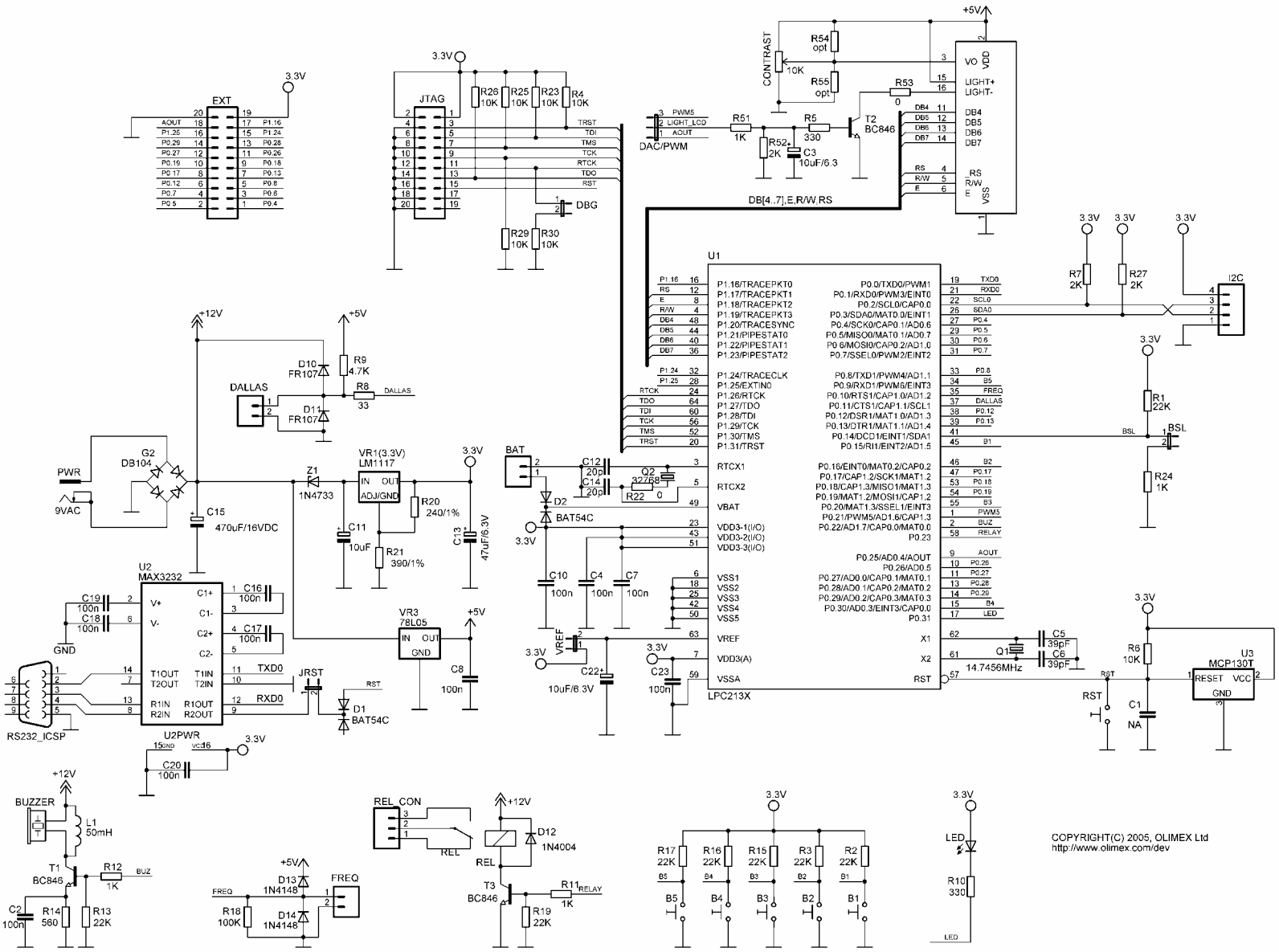
EXT
JTAG
DBG
DAC/PWM
CONTRAST
DB[4..7],E,R/W,RS
U1
LPC213X
I2C
DALLAS
PWR
9VAC
G2
DB104
C15
470uF/16VDC
VR1(3.3V)
LM1117
VR3
78L05
U2
MAX3232
RS232_ICSP
U2PWR
BAT
BAT54C
Q2
32768
Q1
14.7456MHz
U3
MCP130T
BUZZER
L1
50mH
REL_CON
REL
FREQ
LED
COPYRIGHT(C) 2005, OLIMEX Ltd
http://www.olimex.com/dev