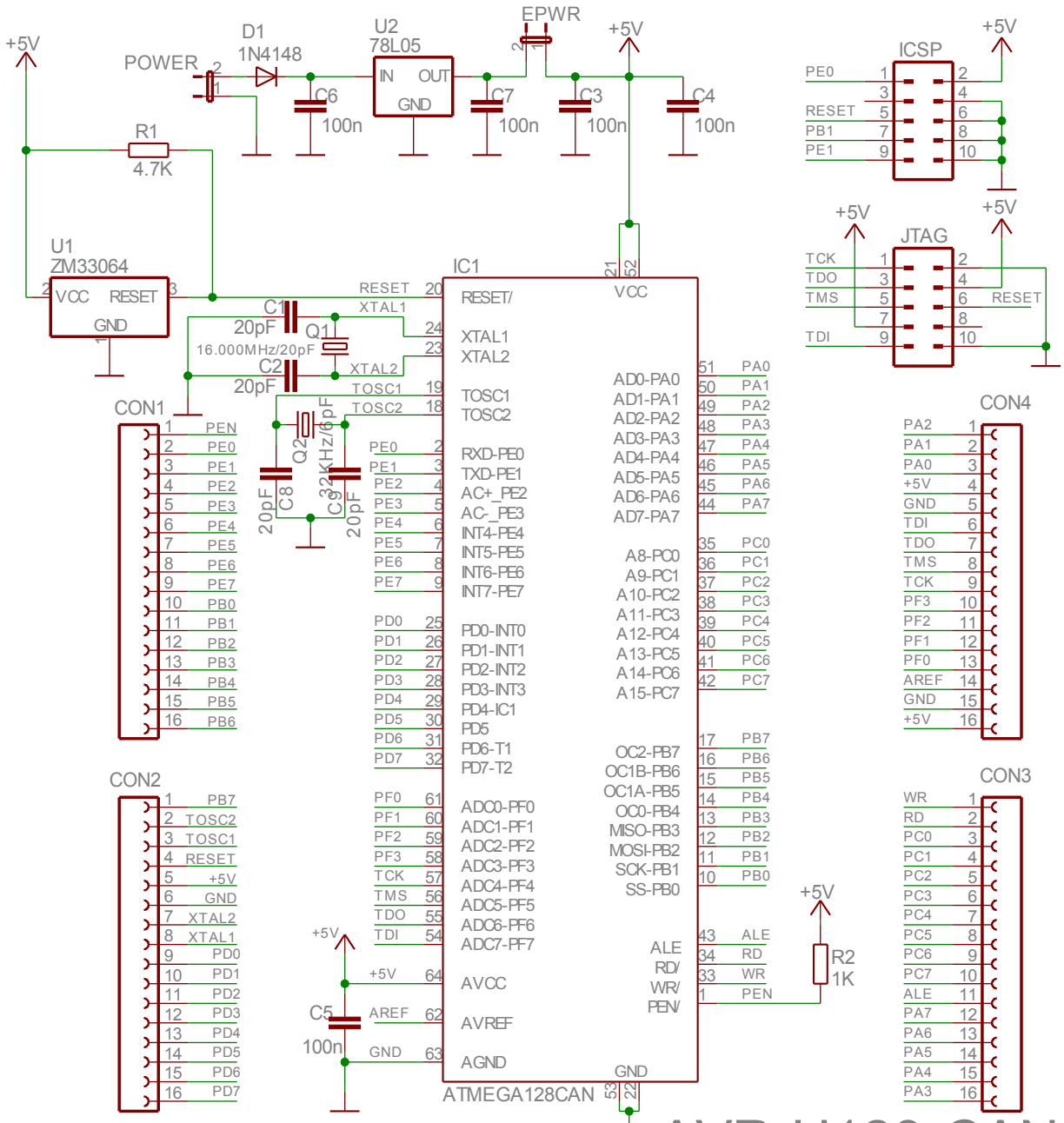
+5V
POWER
D1
1N4148
U2
78L05
IN
OUT
GND
EPWR
C6
100n
C7
100n
C3
100n
C4
100n
R1
4.7K
U1
ZM33064
VCC
RESET
GND
C1
20pF
Q1
16.000MHz/20pF
C2
20pF
Q2
32KHz/6pF
C8
20pF
C9
20pF
IC1
RESET/
XTAL1
XTAL2
TOSC1
TOSC2
RXD-PE0
TXD-PE1
AC+_PE2
AC-_PE3
INT4-PE4
INT5-PE5
INT6-PE6
INT7-PE7
PD0-INT0
PD1-INT1
PD2-INT2
PD3-INT3
PD4-IC1
PD5
PD6-T1
PD7-T2
ADC0-PF0
ADC1-PF1
ADC2-PF2
ADC3-PF3
ADC4-PF4
ADC5-PF5
ADC6-PF6
ADC7-PF7
AVCC
AVREF
AGND
VCC
AD0-PA0
AD1-PA1
AD2-PA2
AD3-PA3
AD4-PA4
AD5-PA5
AD6-PA6
AD7-PA7
A8-PC0
A9-PC1
A10-PC2
A11-PC3
A12-PC4
A13-PC5
A14-PC6
A15-PC7
OC2-PB7
OC1B-PB6
OC1A-PB5
OC0-PB4
MISO-PB3
MOSI-PB2
SCK-PB1
SS-PB0
ALE
RD/
WR/
PEN/
GND
ATMEGA128CAN
C5
100n
R2
1K
CON1
CON2
CON3
CON4
ICSP
JTAG
AVR-H128-CAN
Rev. A
COPYRIGHT(C), 2005
http://www.olimex.com/dev