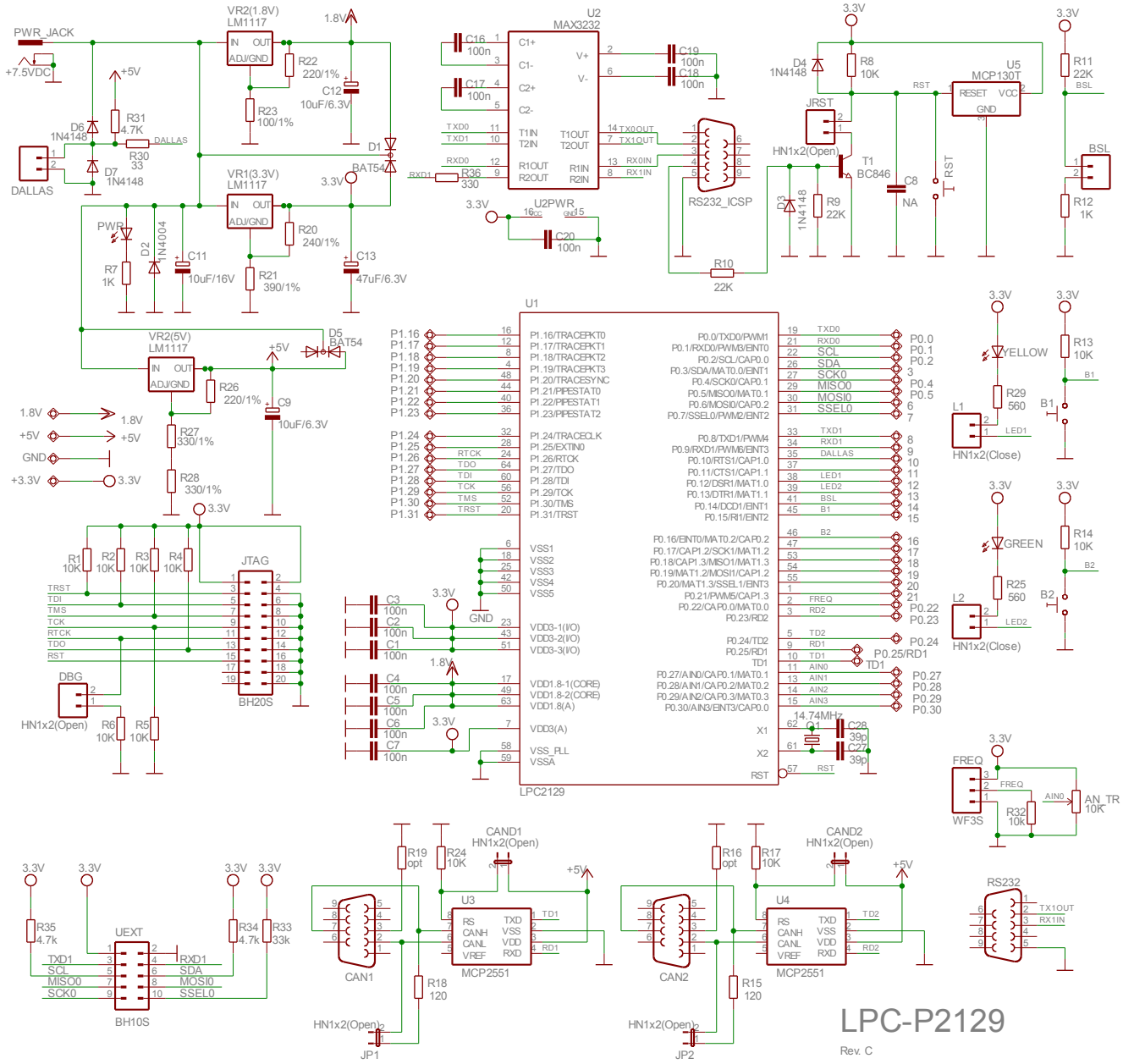
PWR_JACK
+7.5VDC
VR2(1.8V)
LM1117
IN OUT
ADJ/GND
R22
220/1%
R23
100/1%
C12
10uF/6.3V
1.8V
+5V
R31
4.7K
D6
1N4148
DALLAS
R30
33
D7
1N4148
D1
BAT54
VR1(3.3V)
LM1117
3.3V
R20
240/1%
R21
390/1%
C13
47uF/6.3V
PWR
R7
1K
D2
1N4004
C11
10uF/16V
VR2(5V)
LM1117
R26
220/1%
C9
10uF/6.3V
D5
BAT54
R27
330/1%
R28
330/1%
GND
+3.3V
U2
MAX3232
C16
100n
C17
100n
C19
100n
C18
100n
C1+
C1-
C2+
C2-
V+
V-
T1IN
T2IN
T1OUT
T2OUT
R1OUT
R2OUT
R1IN
R2IN
TXD0
TXD1
RXD0
RXD1
TX0OUT
TX1OUT
RX0IN
RX1IN
R36
330
U2PWR
C20
100n
RS232_ICSP
R10
22K
D4
1N4148
R8
10K
JRST
HN1x2(Open)
T1
BC846
D3
1N4148
R9
22K
C8
NA
RST
U5
MCP130T
RESET
VCC
GND
R11
22K
BSL
R12
1K
U1
LPC2129
P1.16/TRACEPKT0
P1.17/TRACEPKT1
P1.18/TRACEPKT2
P1.19/TRACEPKT3
P1.20/TRACESYNC
P1.21/PIPESTAT0
P1.22/PIPESTAT1
P1.23/PIPESTAT2
P1.24/TRACECLK
P1.25/EXTIN0
P1.26/RTCK
P1.27/TDO
P1.28/TDI
P1.29/TCK
P1.30/TMS
P1.31/TRST
VSS1
VSS2
VSS3
VSS4
VSS5
VDD3-1(I/O)
VDD3-2(I/O)
VDD3-3(I/O)
VDD1.8-1(CORE)
VDD1.8-2(CORE)
VDD1.8(A)
VDD3(A)
VSS_PLL
VSSA
P0.0/TXD0/PWM1
P0.1/RXD0/PWM3/EINT0
P0.2/SCL/CAP0.0
P0.3/SDA/MAT0.0/EINT1
P0.4/SCK0/CAP0.1
P0.5/MISO0/MAT0.1
P0.6/MOSI0/CAP0.2
P0.7/SSEL0/PWM2/EINT2
P0.8/TXD1/PWM4
P0.9/RXD1/PWM6/EINT3
P0.10/RTS1/CAP1.0
P0.11/CTS1/CAP1.1
P0.12/DSR1/MAT1.0
P0.13/DTR1/MAT1.1
P0.14/DCD1/EINT1
P0.15/RI1/EINT2
P0.16/EINT0/MAT0.2/CAP0.2
P0.17/CAP1.2/SCK1/MAT1.2
P0.18/CAP1.3/MISO1/MAT1.3
P0.19/MAT1.2/MOSI1/CAP1.2
P0.20/MAT1.3/SSEL1/EINT3
P0.21/PWM5/CAP1.3
P0.22/CAP0.0/MAT0.0
P0.23/RD2
P0.24/TD2
P0.25/RD1
TD1
P0.27/AIN0/CAP0.1/MAT0.1
P0.28/AIN1/CAP0.2/MAT0.2
P0.29/AIN2/CAP0.3/MAT0.3
P0.30/AIN3/EINT3/CAP0.0
X1
X2
RST
14.74MHz
Q1
C28
39p
C27
39p
YELLOW
R29
560
L1
HN1x2(Close)
B1
GREEN
R25
560
L2
B2
R13
10K
R14
10K
R1
10K
R2
10K
R3
10K
R4
10K
JTAG
BH20S
DBG
HN1x2(Open)
R6
10K
R5
10K
C3
100n
C2
100n
C1
100n
C4
100n
C5
100n
C6
100n
C7
100n
FREQ
WF3S
R32
10K
AN_TR
10K
R35
4.7k
UEXT
BH10S
R34
4.7k
R33
33k
R19
opt
R24
10K
CAND1
HN1x2(Open)
U3
MCP2551
CAN1
R18
120
JP1
R16
opt
R17
10K
CAND2
HN1x2(Open)
U4
MCP2551
CAN2
R15
120
JP2
RS232
LPC-P2129
Rev. C
COPYRIGHT(C) 2010, OLIMEX Ltd.
http://www.olimex.com/dev