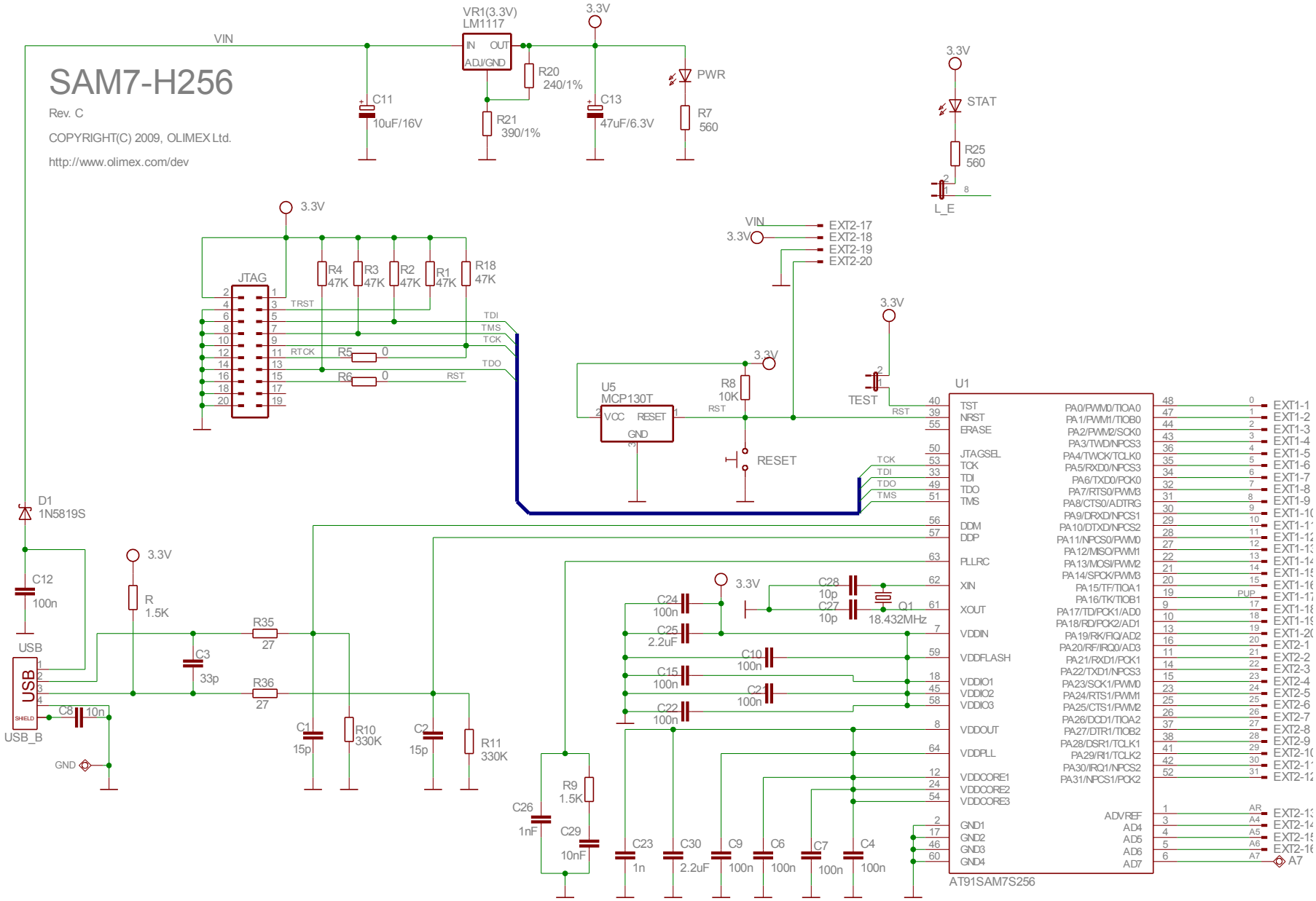
SAM7-H256
Rev. C
COPYRIGHT(C) 2009, OLIMEX Ltd.
http://www.olimex.com/dev
VIN
VR1(3.3V)
LM1117
IN
OUT
ADJ/GND
3.3V
R20
240/1%
R21
390/1%
C11
10uF/16V
C13
47uF/6.3V
PWR
R7
560
STAT
R25
560
L_E
JTAG
TRST
TDI
TMS
TCK
RTCK
TDO
RST
R4
47K
R3
47K
R2
47K
R1
47K
R18
47K
R5
0
R6
0
EXT2-17
EXT2-18
EXT2-19
EXT2-20
U5
MCP130T
VCC
RESET
GND
R8
10K
TEST
RESET
U1
TST
NRST
ERASE
JTAGSEL
TCK
TDI
TDO
TMS
DDM
DDP
PLLRC
XIN
XOUT
VDDIN
VDDFLASH
VDDIO1
VDDIO2
VDDIO3
VDDOUT
VDDPLL
VDDCORE1
VDDCORE2
VDDCORE3
GND1
GND2
GND3
GND4
ADVREF
AD4
AD5
AD6
AD7
AT91SAM7S256
PA0/PWM0/TIOA0
PA1/PWM1/TIOB0
PA2/PWM2/SCK0
PA3/TWD/NPCS3
PA4/TWCK/TCLK0
PA5/RXD0/NPCS3
PA6/TXD0/PCK0
PA7/RTS0/PWM3
PA8/CTS0/ADTRG
PA9/DRXD/NPCS1
PA10/DTXD/NPCS2
PA11/NPCS0/PWM0
PA12/MISO/PWM1
PA13/MOSI/PWM2
PA14/SPCK/PWM3
PA15/TF/TIOA1
PA16/TK/TIOB1
PA17/TD/PCK1/AD0
PA18/RD/PCK2/AD1
PA19/RK/FIQ/AD2
PA20/RF/IRQ0/AD3
PA21/RXD1/PCK1
PA22/TXD1/NPCS3
PA23/SCK1/PWM0
PA24/RTS1/PWM1
PA25/CTS1/PWM2
PA26/DCD1/TIOA2
PA27/DTR1/TIOB2
PA28/DSR1/TCLK1
PA29/RI1/TCLK2
PA30/IRQ1/NPCS2
PA31/NPCS1/PCK2
EXT1-1
EXT1-2
EXT1-3
EXT1-4
EXT1-5
EXT1-6
EXT1-7
EXT1-8
EXT1-9
EXT1-10
EXT1-11
EXT1-12
EXT1-13
EXT1-14
EXT1-15
EXT1-16
EXT1-17
EXT1-18
EXT1-19
EXT1-20
EXT2-1
EXT2-2
EXT2-3
EXT2-4
EXT2-5
EXT2-6
EXT2-7
EXT2-8
EXT2-9
EXT2-10
EXT2-11
EXT2-12
EXT2-13
EXT2-14
EXT2-15
EXT2-16
A7
D1
1N5819S
C12
100n
R
1.5K
C3
33p
R35
27
R36
27
USB
USB_B
SHIELD
C8
10n
GND
C1
15p
R10
330K
C2
15p
R11
330K
R9
1.5K
C26
1nF
C29
10nF
C24
100n
C25
2.2uF
C15
100n
C22
100n
C10
100n
C21
100n
C28
10p
C27
10p
Q1
18.432MHz
C23
1n
C30
2.2uF
C9
100n
C6
100n
C7
100n
C4
100n